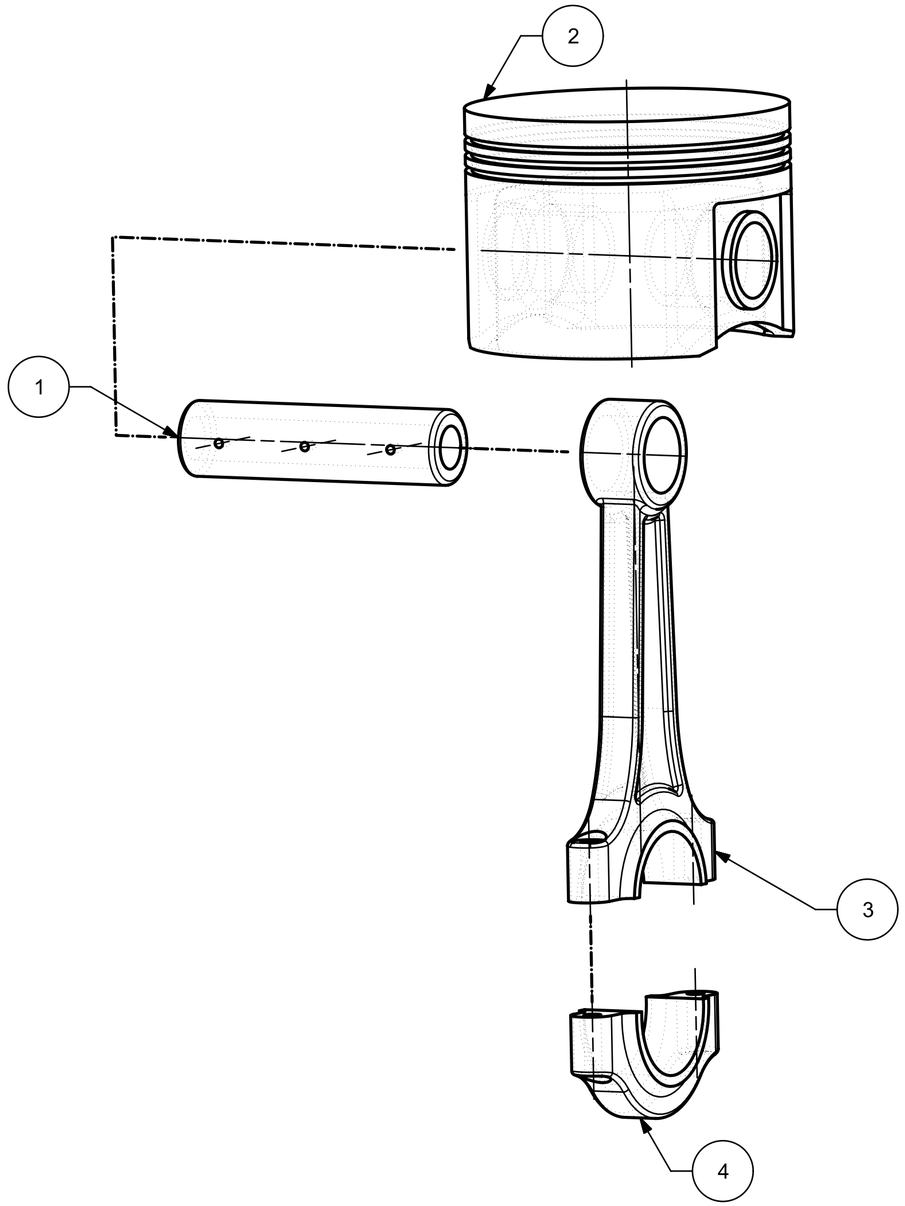

PC NO	PART NAME	QTY
4	CONNECTING BOTTOM	1
3	CONNECTING ROD	1
2	PISTON	1
1	PISTON PIN	1

ALL DIMENSIONS IN MM

VAMSHI'S

THIS DRAWING HAS BEEN PRODUCED USING AN EXAMPLE TEMPLATE PROVIDED BY SIEMENS PLM SOFTWARE

FIRST ISSUED	
DRAWN BY	
CHECKED BY	
APPROVED BY	

TITLE

SIZE	DRG NO.	SHEET REV
A2	Piston assembly	A
SCALE 1:2		SHEET 1 OF 1

A2

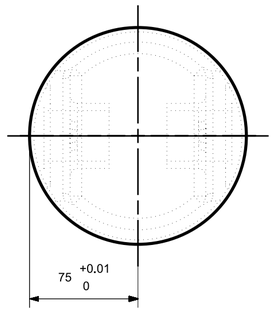

Top View

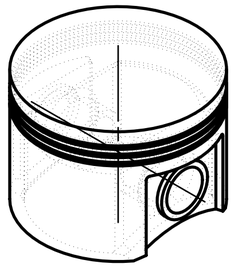

Isometric View

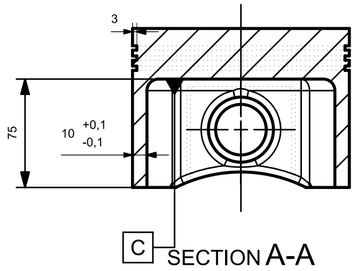

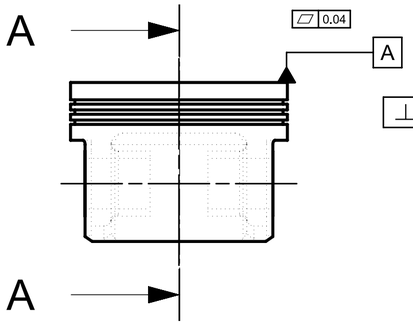

Front VIew

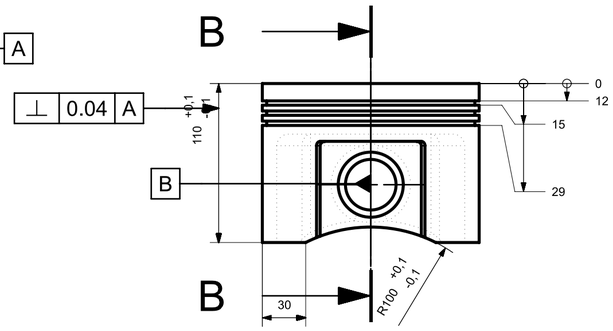

Right View

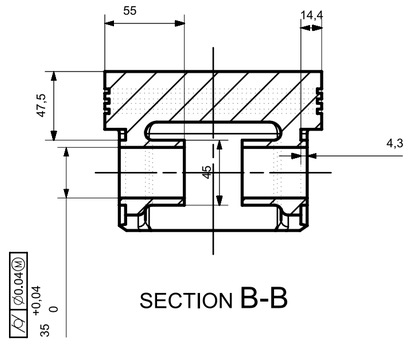

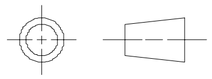

ALL DIMENSIONS IN MM

VAMSHI'S		THIS DRAWING HAS BEEN PRODUCED USING AN EXAMPLE TEMPLATE PROVIDED BY SIEMENS PLM SOFTWARE		
FIRST ISSUED		TITLE		
DRAWN BY				
CHECKED BY				
APPROVED BY		SIZE A2	DRG NO. Piston	SHEET REV A
		SCALE 1:3		SHEET 1 OF 1

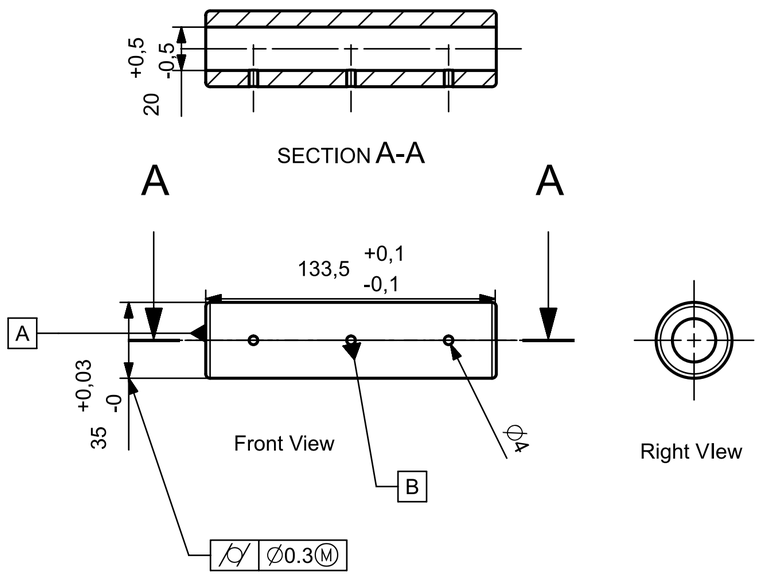

ALL DIMENSIONS IN MM

VAMSHI'S		THIS DRAWING HAS BEEN PRODUCED USING AN EXAMPLE TEMPLATE PROVIDED BY SIEMENS PLM SOFTWARE		
FIRST ISSUED		TITLE		
DRAWN BY				
CHECKED BY				
APPROVED BY		SIZE A2	DRG NO. Piston pin	SHEET REV A
		SCALE 1:2		SHEET 1 OF 1

A2

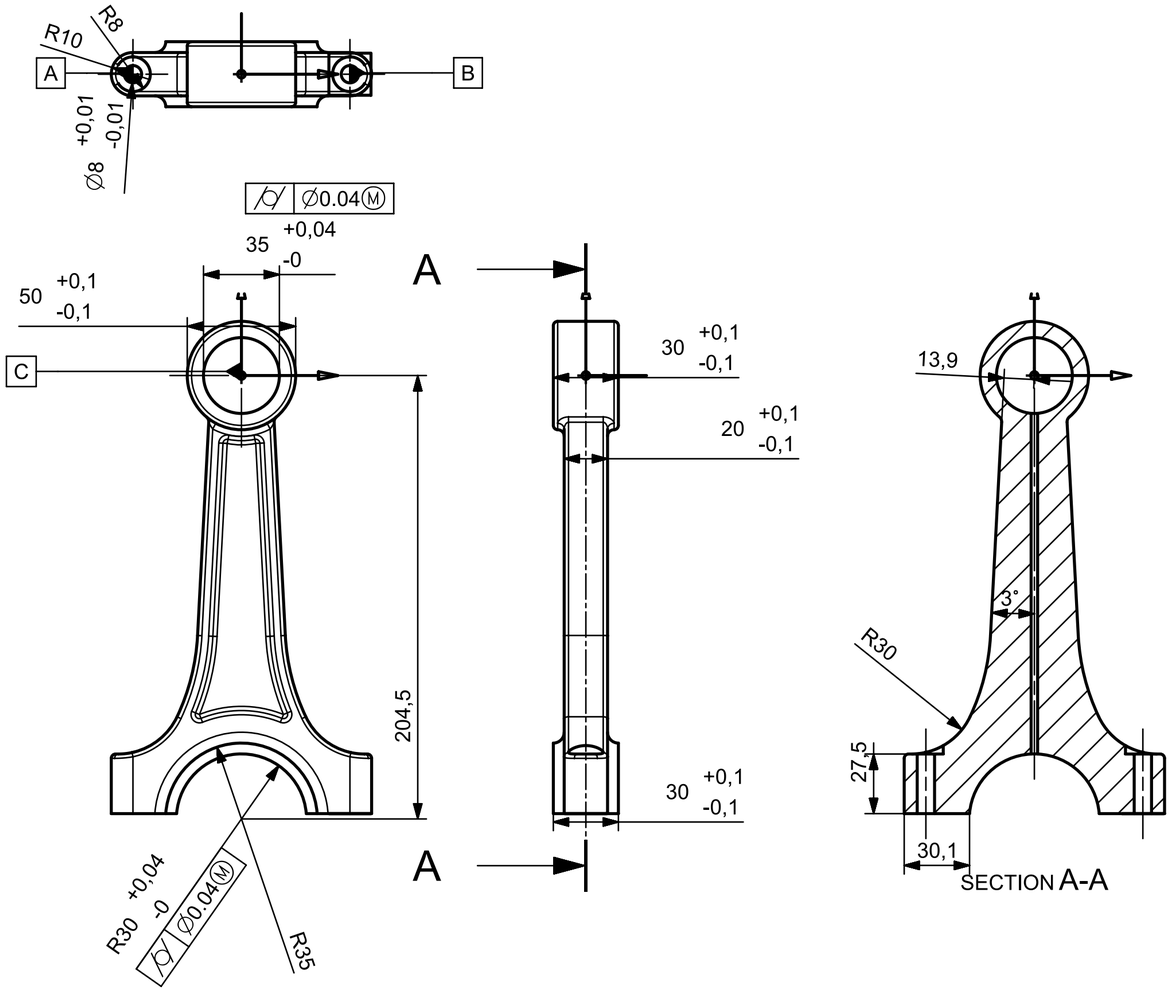

ALL DIMENSIONS IN MM

VAMSHI'S		THIS DRAWING HAS BEEN PRODUCED USING AN EXAMPLE TEMPLATE PROVIDED BY SIEMENS PLM SOFTWARE	
FIRST ISSUED		TITLE	
DRAWN BY			
CHECKED BY			
APPROVED BY		SIZE A2	DRG NO. Connecting rod	SHEET REV A
		SCALE 1:2	SHEET 1 OF 1	A2

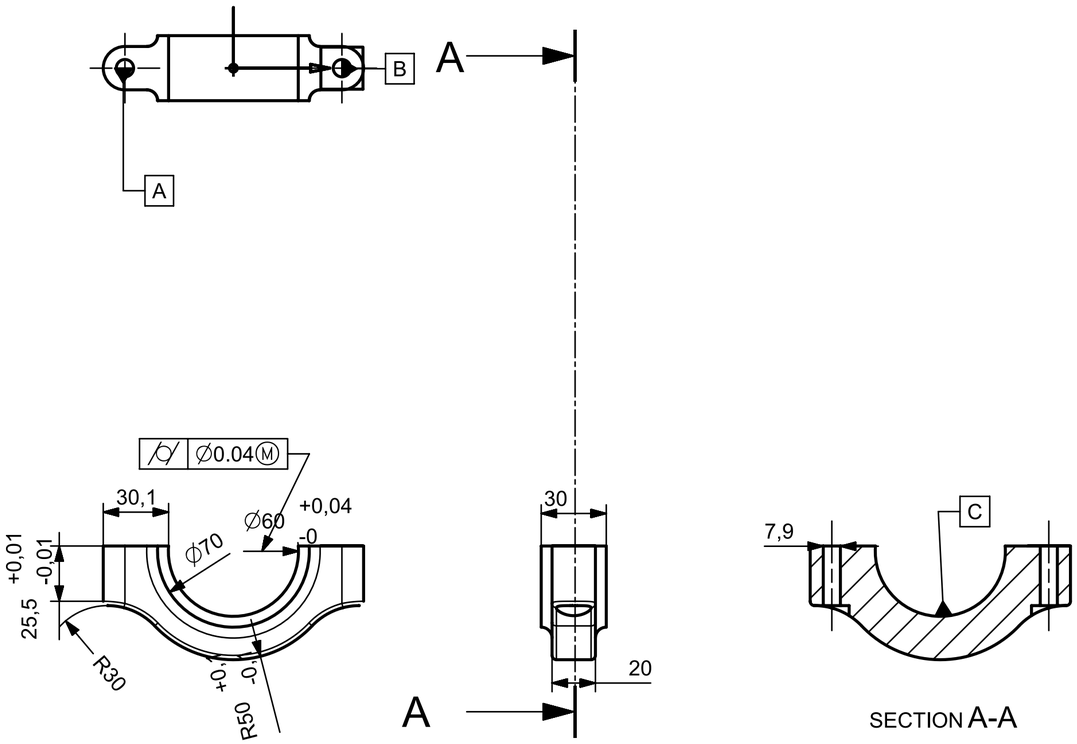

ALL DIMENSIONS IN MM

VAMSHI'S		THIS DRAWING HAS BEEN PRODUCED USING AN EXAMPLE TEMPLATE PROVIDED BY SIEMENS PLM SOFTWARE		
FIRST ISSUED		TITLE		
DRAWN BY				
CHECKED BY				
APPROVED BY		SIZE A2	DRG NO. connecting bottom	SHEET REV A
		SCALE 1:2		SHEET 1 OF 1

A2